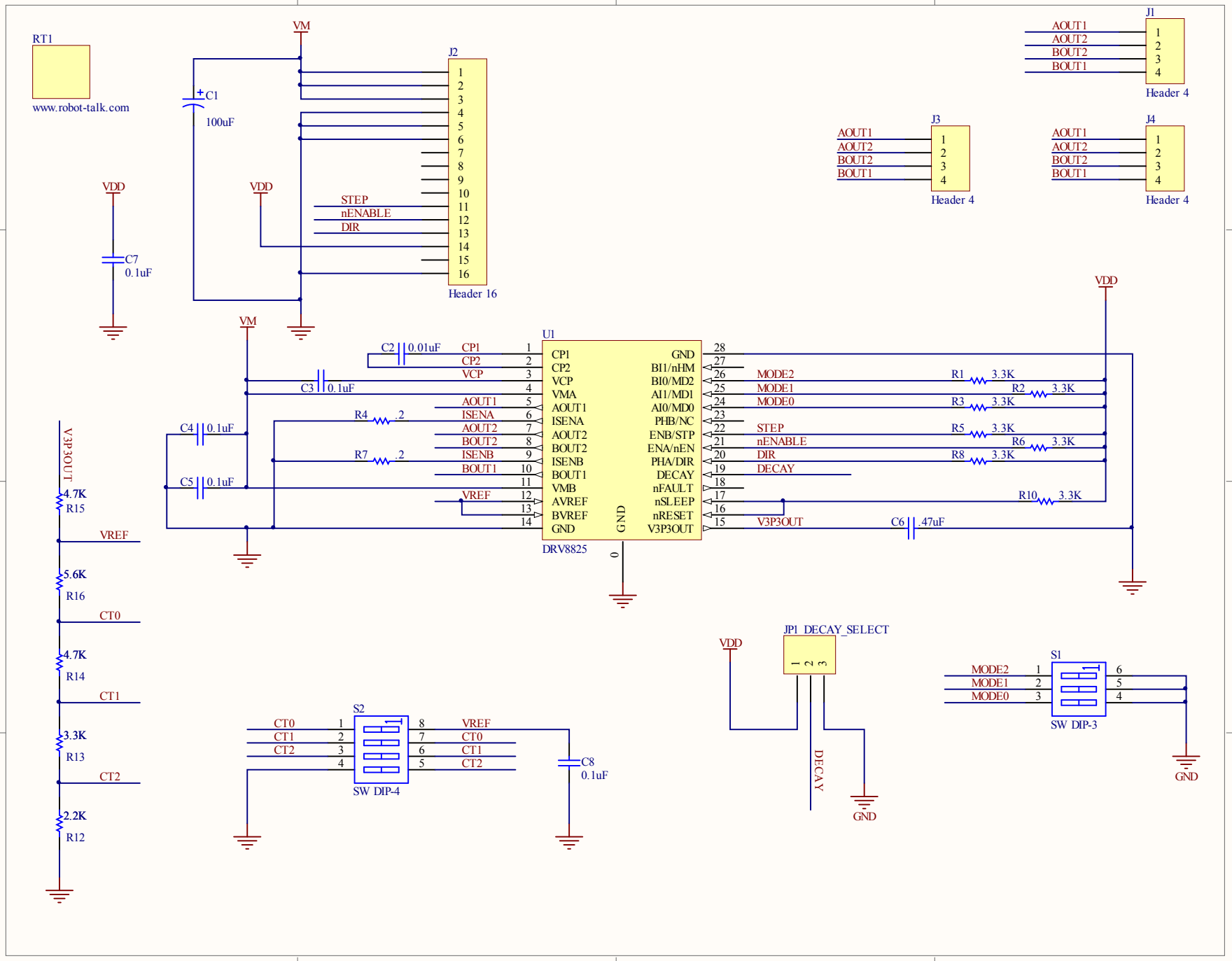
RT1
www.robot-talk.com
VM
C1
100uF
J2
STEP
nENABLE
DIR
Header 16
VDD
C7
0.1uF
J1
AOUT1
AOUT2
BOUT2
BOUT1
Header 4
J3
J4
U1
DRV8825
C2 0.01uF
C3 0.1uF
C4 0.1uF
C5 0.1uF
R4 .2
R7 .2
CP1
CP2
VCP
VMA
AOUT1
ISENA
AOUT2
BOUT2
ISENB
BOUT1
VMB
VREF
AVREF
BVREF
GND
BI1/nHM
BI0/MD2
AI1/MD1
AI0/MD0
PHB/NC
ENB/STP
ENA/nEN
PHA/DIR
DECAY
nFAULT
nSLEEP
nRESET
V3P3OUT
MODE2
MODE1
MODE0
STEP
nENABLE
DIR
DECAY
R1 3.3K
R2 3.3K
R3 3.3K
R5 3.3K
R6 3.3K
R8 3.3K
R10 3.3K
C6 .47uF
V3P3OUT
4.7K R15
VREF
5.6K R16
CT0
4.7K R14
CT1
3.3K R13
CT2
2.2K R12
S2
SW DIP-4
C8
0.1uF
JP1 DECAY_SELECT
S1
SW DIP-3
GND