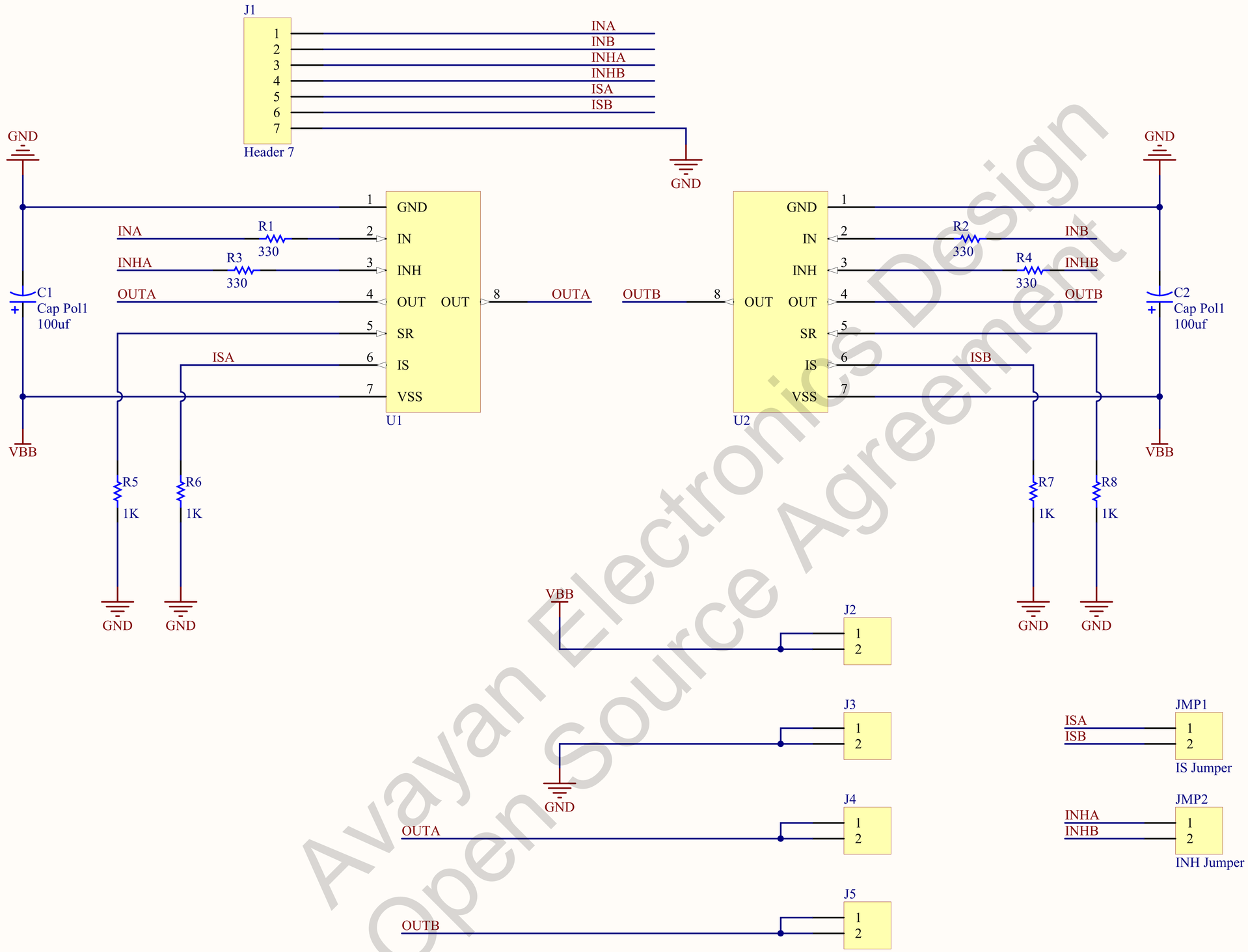

Avayan Electronics Design
Open Source Agreement